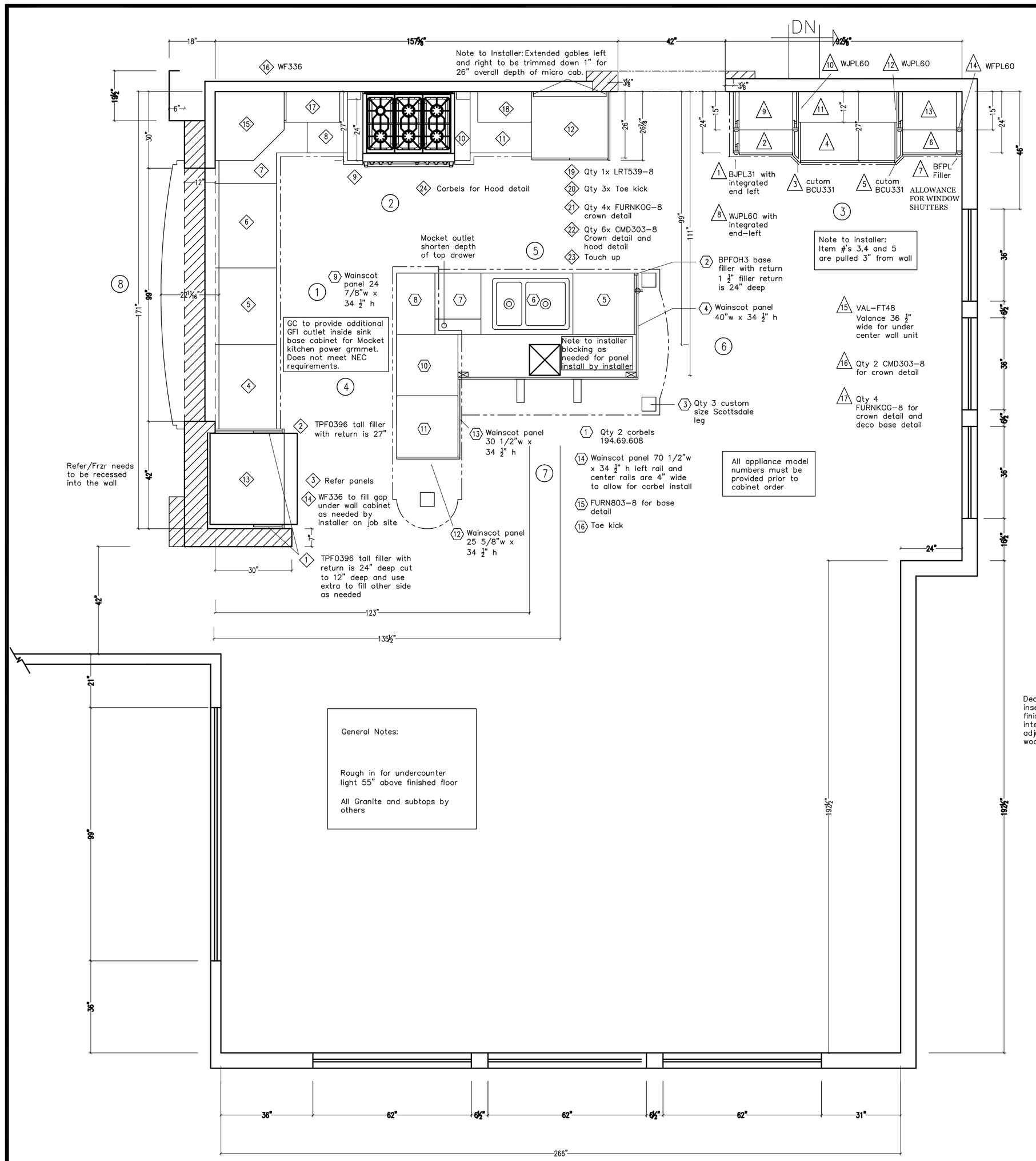

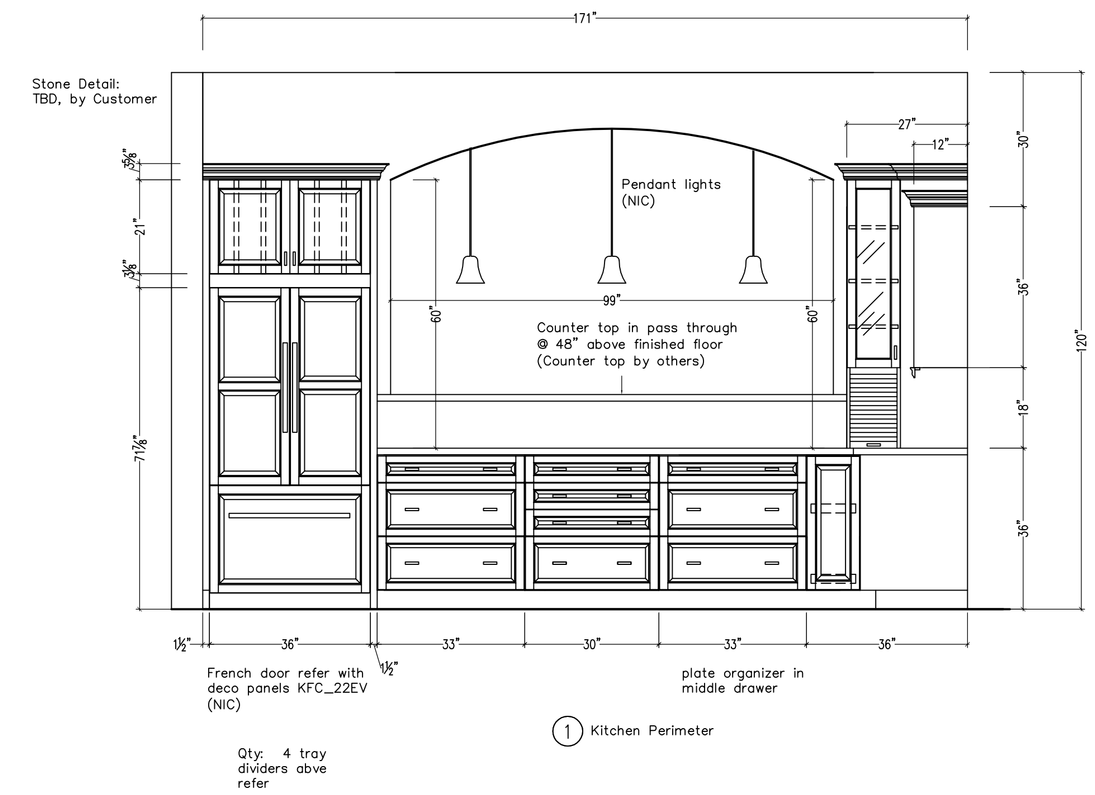

1 Kitchen Perimeter

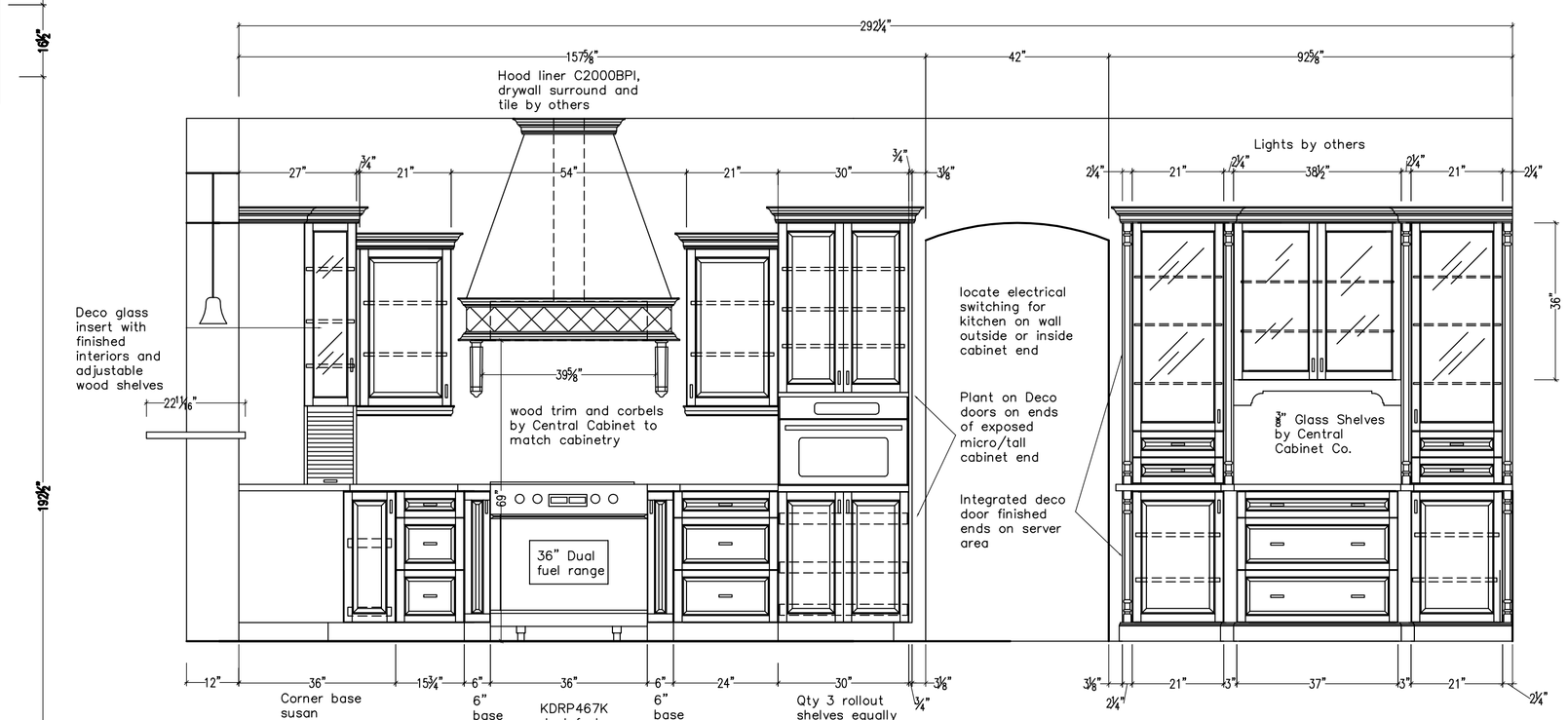

2 Kitchen Perimeter

3 Breakfast Nook

Note to installer: Hood is shown 69" from finished floor, client to verify final installation height

Corbel Detail TYP

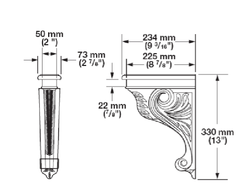

Crown detail TYP

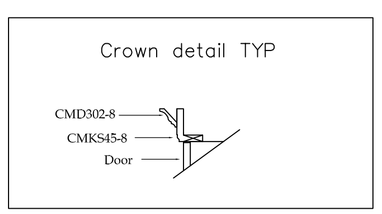

Light rail detail for kitchen

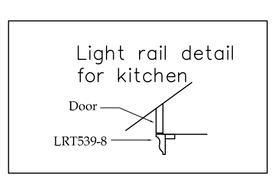

Decorative base at island and server

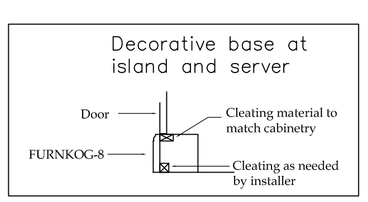

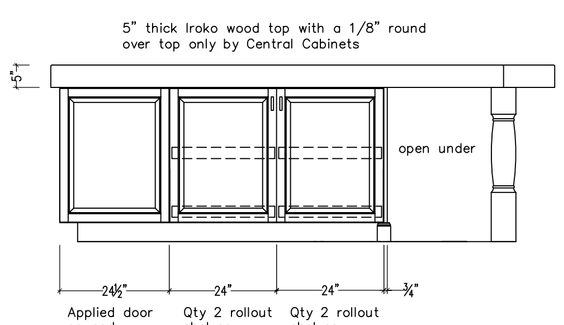

4 Kitchen Island

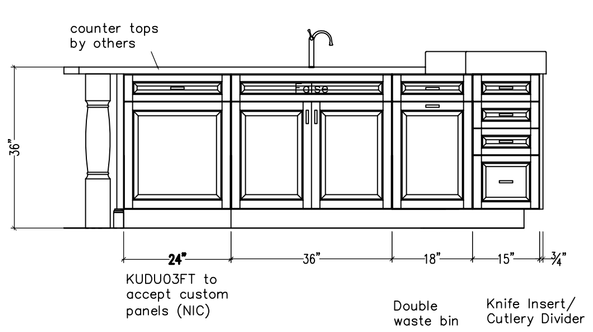

5 Kitchen Island

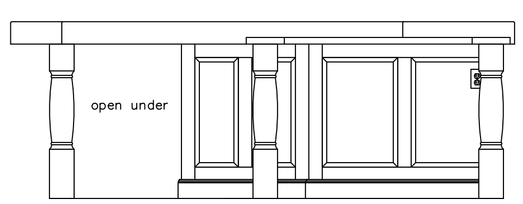

6 Kitchen Island

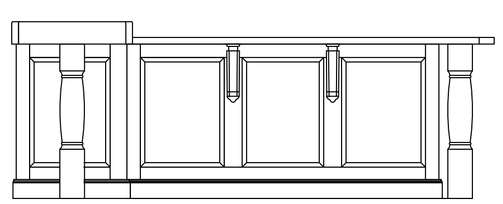

7 Kitchen Island

All counter tops (except for Iroko wood top at island) backsplashes and sub tops by other

NOTE: CONTRACTOR TO VERIFY ALL CONSTRUCTION METHODS & MATERIALS PRIOR TO CONSTRUCTION. ALL LUMBER SIZING OTHER THAN THOSE SPECIFICALLY ENGINEERED SHALL BE THE RESPONSIBILITY OF THE BUILDING CONTRACTOR.

PROJECT

Elsner Residence

cabinet plan

Poutre's Design, Inc.
7128 E. Mercer Lane
Suite B
Scottsdale, AZ 85254

Office: (480)609-6774
Fax: (480)588-6761

SCALE: 1/2" = 1'-0"

DATE: February 6, 2009

DRAWN BY: LKZ

JOB # 2009-110

REVISIONS:

1 FEB 17, 2009

2 FEB 23, 2009

3 FEB 24, 2009

SHEET# MARCH 10, 2009

1 of 3

April 24, 2009 Install